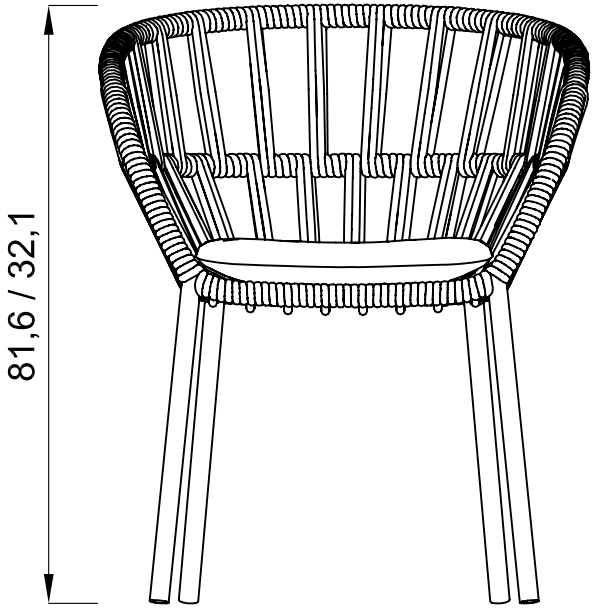

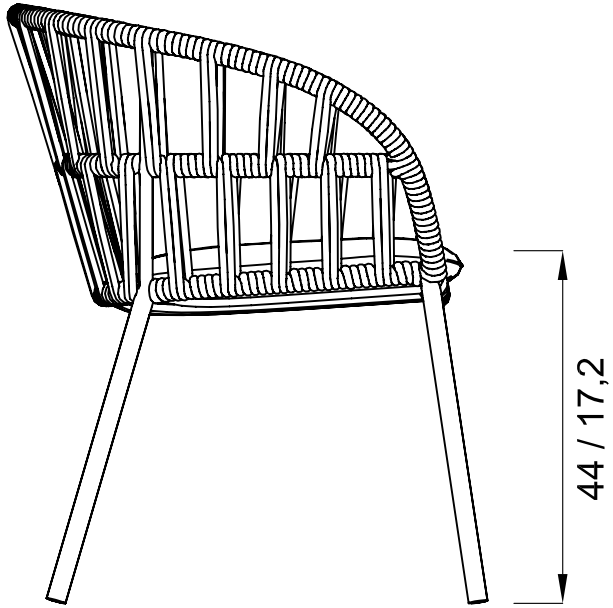

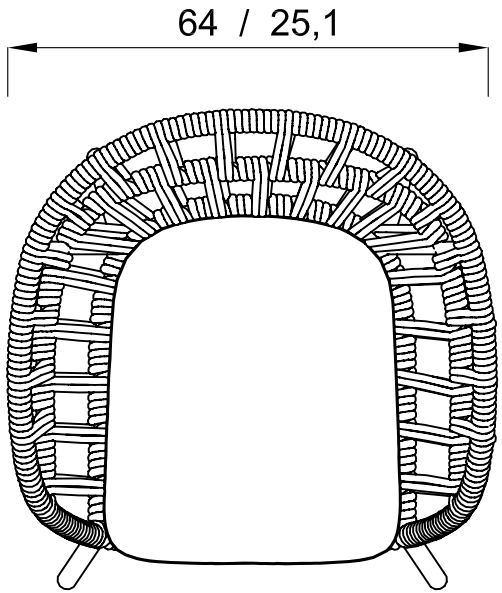

PRODUCT CODE:
271000000C

COLLECTION:
KETTAL CALA

PRODUCT:
Dining armchair contract

SCALE: 1:10
UNIT: cm/inch

FORMAT:
Din A4

DATE:
2018/2/19

KETTAL

The KETTAL® Collections have been exclusively designed by our company or have been developed for us by designers. The designs have been registered. KETTAL holds the copyrights for all the products. All products carry the KETTAL® label
Our trademark is protected by law. Infringements against said copyrights or trademark will be prosecuted. We are not liable for variations in dimensions, since variations are possible with handmade furniture.